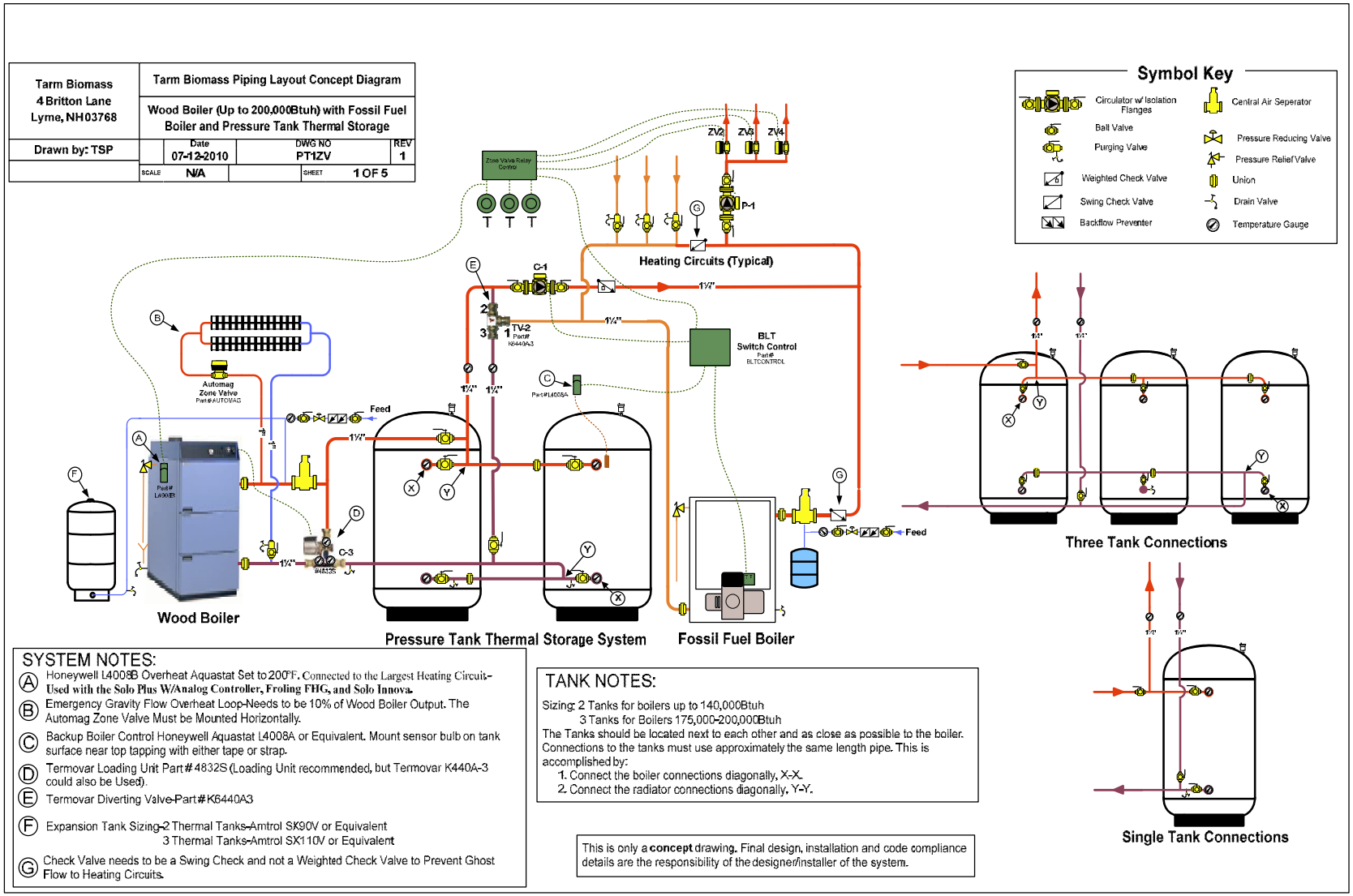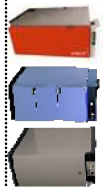# 2.15 Plumbing Example-PT1ZV